ACCESSORIES AND SCHEMATIC CONNECTION DIGITAL LOADCELL
数字称重传感器连线图

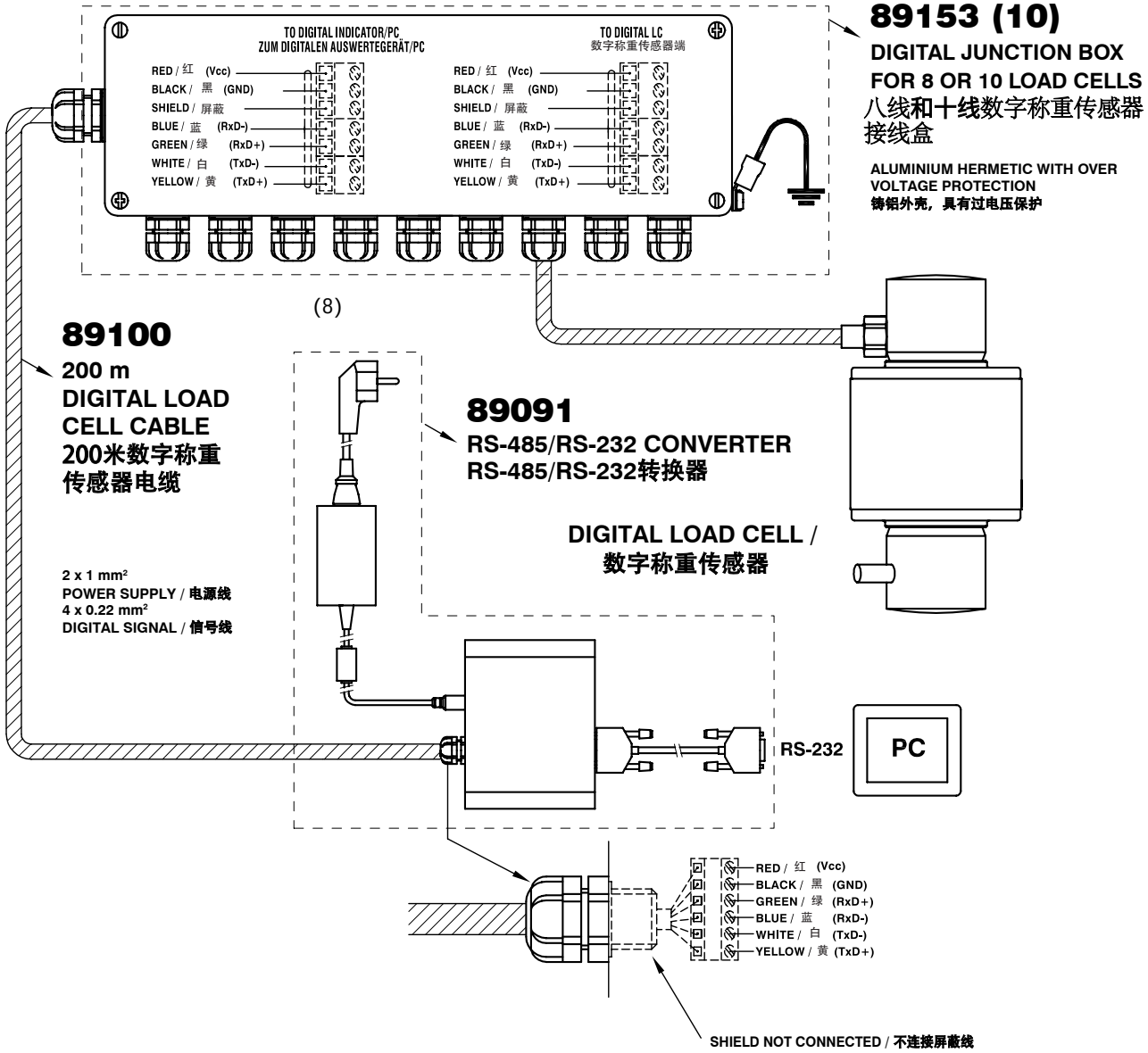

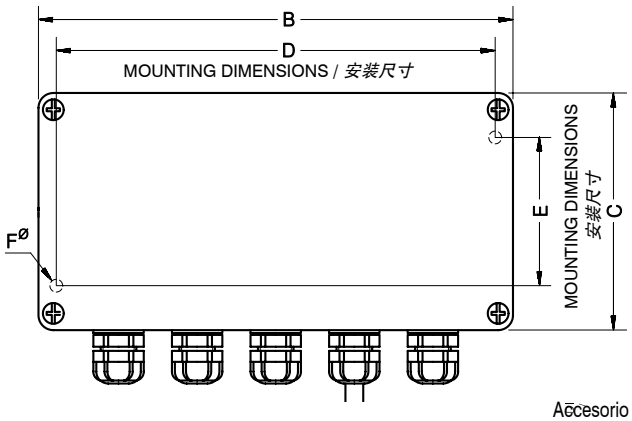

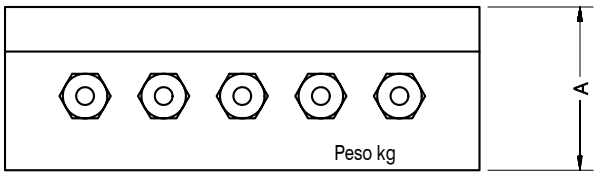

Accesorio Accessory	Load Cells 传感器	A	B	C	D	E	F⌀	Weight kg 重量 kg	Material 材质	IP
89090	8	52	250	80	238	52	4.8	1.0	Aluminium/铸铝	IP66
89153	10	52	250	80	238	52	4.8	1.0	Aluminium/铸铝	IP66

Dimensions in mm. *单位：mm.*