EXAMPLE OF DOSING BY CHARGE AT ONE SPEED WITH SMART

Once are configured all the basic parameters of the device (SCALE DEF, OPTIONS, MASS CALIB. or mV CALIB.), we will configure the DIGITAL OUTPUTS menu, where we set the setpoint for the dosing. Afterwards we will configure the DIGITAL INPUTS menu where we will define the start and the end of the dosing.

Finally we will show the connection ways for the SMART digital inputs and outputs, via SUB-D 25 connector or via cable glands for the SMART IP-65 version.

Starting from the following example of dosing:
We have got a 50kg load cell capacity and we want to perform a 30kg scale with a 10gr division.
We will make 5, 10, 15, 20 or 25kg pots.
The SCALE DEF menu will be configured as follows:

FUNCT: INDICA
BIRANGE: OFF (Multirange deactivated)
CAP: 30 Kg (Maximum capacity of the scale)
D1: 1 (Value of the scale division)
DP: 0,01 (Decimal point position)
0-TRACK: 0,5d (Zero follower band)
0-TOP: 1,9 (Allowed limit to the ▸0◂ key)
0-START: OFF (Auto zeroes when it is turned on)
0-NEG: OFF (Auto zeroes if negative weight)
UNIT: Kg (Units)

VALUES THAT WE SHOULD SET IN D_OUTs TO PERFORM THE DOSING BY CHARGE AT ONE SPEED ACCORDING TO THE EXAMPLE (5kg pot)

D_OUT n	1	2	3
UL	0	5,0	0
TYPE	NET	P_REL	P_REL
REL	1	1	2
TRIP	H	H	L
BD	0	0	0
HY	0	0,02	0
D.LOC	ON	OFF	ON
OUTPUT	OFF	2	3

D_OUT's CONFIGURATION MENU

Press EXIT + →0← (first press EXIT and hold and press →0←) the device will ask us for the PIN code, to configure this menu is not necessary because we will not change protected parameters, press and get into the configuration menu, then press 5 times key, now we are in **D_OUT** menu.

D_OUT

Press

D_OUT n

Press

1,2,3 or 4…….. It shows the output number we want to configure, from 1 to 4, with the arrows ← and →we will choose the output to be configured.

Press to go back to D_OUT n

D_OUT n

Press

UL (1,2,3 or 4)…….. Press to configure the setpoint value(with the arrows ↑ and ↓ set the value and with the arrows ← and → change the digit) for the selected output.

First press and then

TYPE (1,2,3 or 4)…….. Press to configure the output action type.

First press and then

REL (1,2,3 or 4)…….. Press to configure if the setpoint is relative to other.

First press and then

TRIP (1,2,3 or 4)…….. Press to configure the setpoint trip action.

First press and then

BD (1,2,3 or 4)……..(continues on next page)

BD (1,2,3 or 4)…….. Press and set the band where the parameter trip actuates, parameter only valid for selections of IN_B and OUT_B of TRIP.

First press and then

HY (1,2,3 or 4)…….. Press to set the hysteresis value which prevents the chattering of the digital output.

First press and then

D_LOC (1,2,3 or 4)…….. Press to block the modification of VL(i) value through the keyboard.

First press and then

OUTPUT (1,2,3 or 4)…….. Press and set the physical output where the setpoint will actuate.

First press and then

D_OUT n

Press twice to get out from the configuration menu.

Weight mode

IMPORTANT: We should keep in mind that surely we will have to change the setpoint value, I mean, we have to set a lower value because of the gap between the closing of the relay, the in flight material and the weight of the scale.

NOTE: The dosing starts by activating the TARE function, NET weight, for this reason is necessary to put a tare or a container on the scale.
In case of not having a tare is necessary to consider performing the calibration of the scale without the top platform. In this way the scale will always give us a positive weight equal to the value of the platform.

Now to finish we should set the digital input menu, where we will frame the dosage maneuver.

VALUES THAT WE SHOULD SET IN THE D_IN (Digital Inputs) TO PERFORM THE DOSING AT ONE SPPED ACCORDING TO THE EXAMPLE

D_IN n	1	2
TYPE	TARE	C.TARE
FUNC	H	H

D_IN's CONFIGURATION MENU

Press EXIT + →0← (first EXIT and hold and then press →0←)the device will ask us for the PIN code, to set that menu is not necessary to introduce the PIN code, because we are not going to change any protected parameter, press and go into the configuration menu, press **6** times and now we are in **D_IN** menu.

D_IN

↓ **Press**

D_IN no

↓ **Press**

1,2,3 or 4…….. It shows the input number we want to configure, from 1 to 4, with the arrows ← and →we will choose the input to be configured.

↓ **Press** to go back to D_IN no

D_IN no

↓ **Press**

TYPE (1,2,3 or 4)…….. Press to configure the input action type.

↓ **First press and then**

FUNC (1,2,3 or 4)…….. Press to configure the input action mode

↓ **First press and then**

D_IN no

↓ **Press twice** to go out from the configuration menu

Weight Mode

Once are configured the D_OUT and the D_IN, we should perform the following wiring:

The D_OUT 3 will be used to end the maneuver, I mean, we will connect the D_OUT 3 output to the D_IN 2 input, in this way, we will frame the maneuver. When the device will reach the setpoint, it will perform a C.TARE (Clear Tara) automatically to finish the maneuver.

It's shown below the two possible examples of connection, or a SUB-D 25 female connector or a SMART IP-65 (with cable glands).

Multi option wiring connection for the digital inputs and outputs with a SUB-D 25 female connector

	DIGITAL INPUTS	
SUB-D 25 aerial female connector 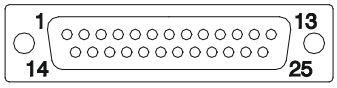 Pin allocation welding's side view	PIN	SIGNAL
	5	IN1
	18	IN2
	6	IN3
	19	IN4
	4	GND
	DIGITAL OUPTUS	
	PIN	SIGNAL
	9	Vext
	10	D-OUT1
	22	D-OUT2
	11	D-OUT3
	23	D-OUT4
	4	GND

The SUB-D 25 female connector it should be connected as follows:
Pin 11(D_OUT3) with pin 18(IN2) to frame the dosage maneuver.

Wiring diagram for a SMART-IP65 multi option

For a SMART IP-65 the wiring connection of the digital inputs and outputs must be performed as follows.

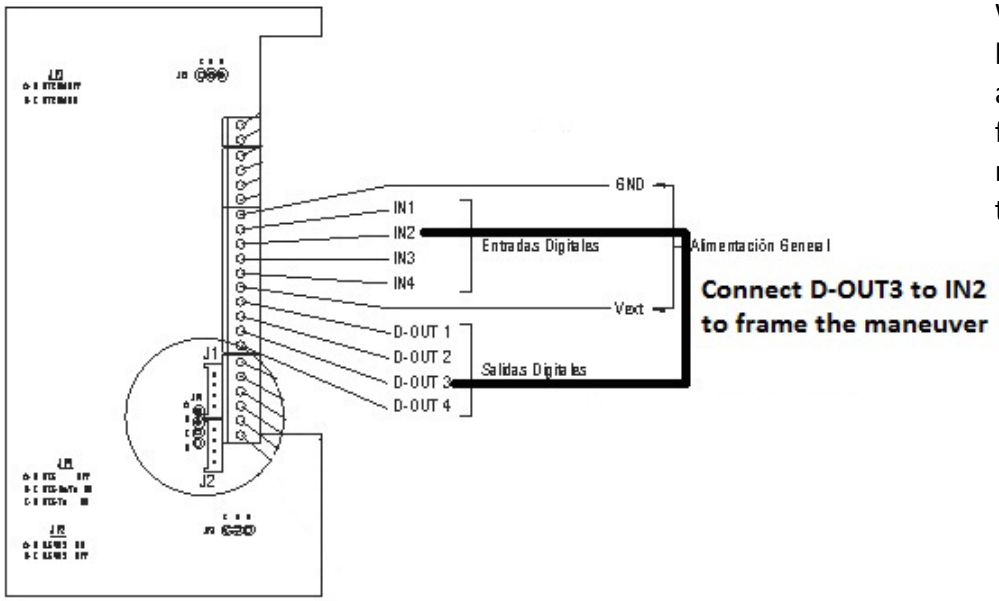

We should perform a bridge between D-OUT3 and IN2 terminal, to frame the dosage maneuver, as shown in the figure.

4 Digital Inputs/4 Relay outputs accessory
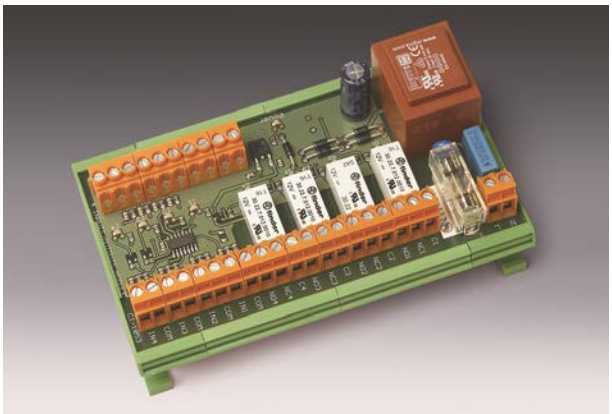
Accessory necessary if you want to have 4 digital relay outputs, because with SMART Multi 1 or Multi 2 there are already 4 digital outputs, but these outputs aren't to relay are Open Collector transistors.