MODEL 490 (150T)

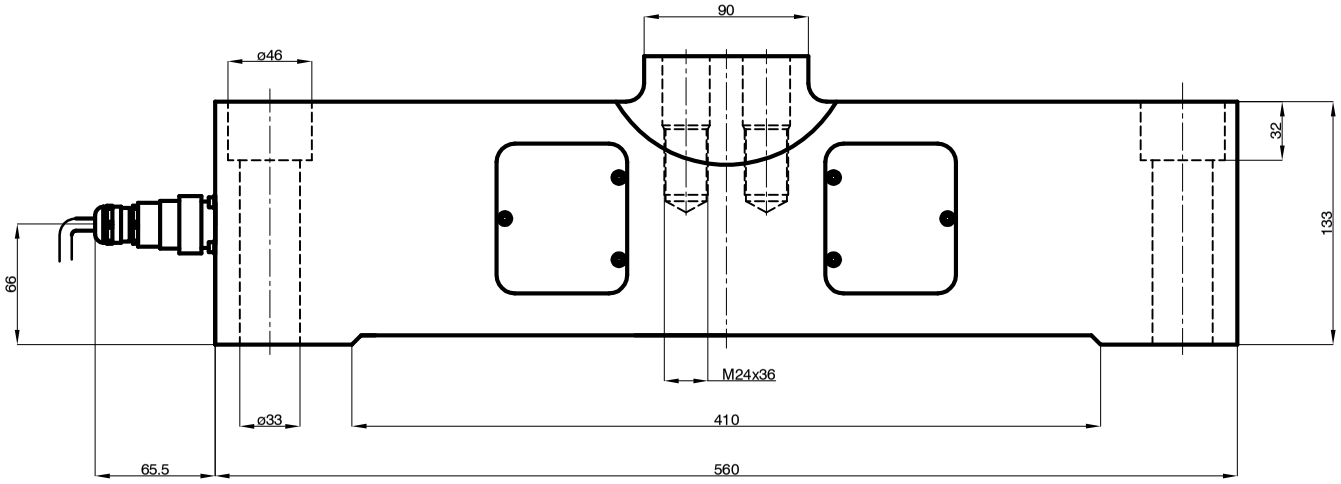

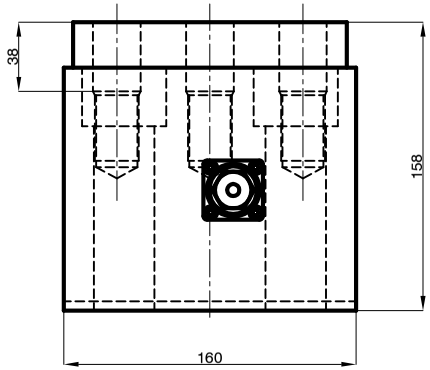

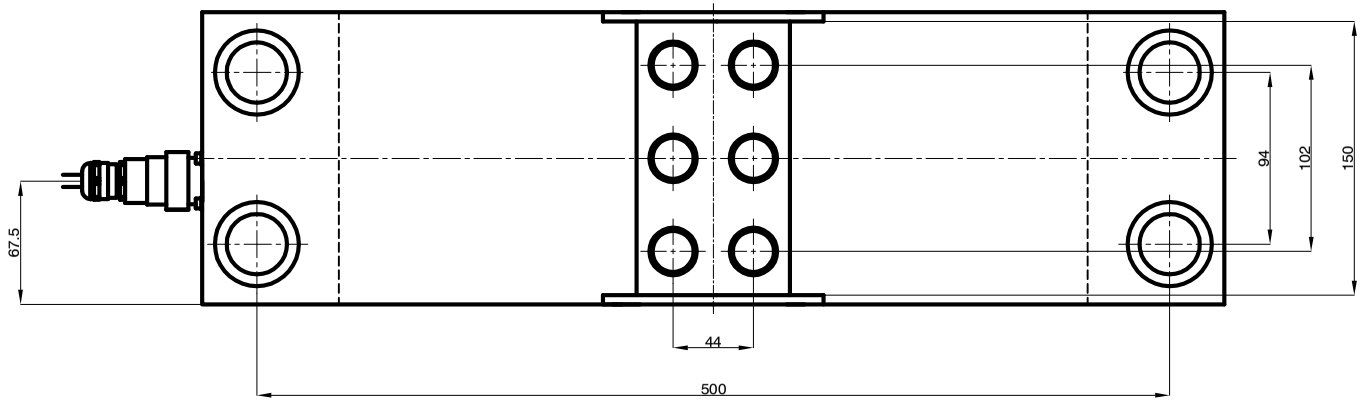

Dimensiones en mm. ***Dimensions in mm.***

CD-0138
V1 / 05-05-2015